Software Defined Radio

BY: JEFFREY BAIL – NT1K

My Background

- Interest in SDR started with the Flex 3000
- Started with Softrock Ensemble
- Wanted a full SDR radio but couldn't afford it
- Explored many options for the best SDR for the dollar
- Been approached by many members about SDR

Have Something To Add? Please Do So!
I am not a "SDR Master" by any means

What is Software Defined Radio

- In basic terms, it takes an analog signal and converts it to digital signal for processing.
- Software (either by computer or embedded systems) transforms the digital data to any other form the application requires (SSB, Digital)
- "Digital" Radios were in use since the early 70's
- Term "Software Radio" was used in 1984 to refer to a Digital Baseband Receiver
- SDR type radios were being produced to the Military in the 1990's for a program called "SPEAKeasy"

SDR Block Diagram

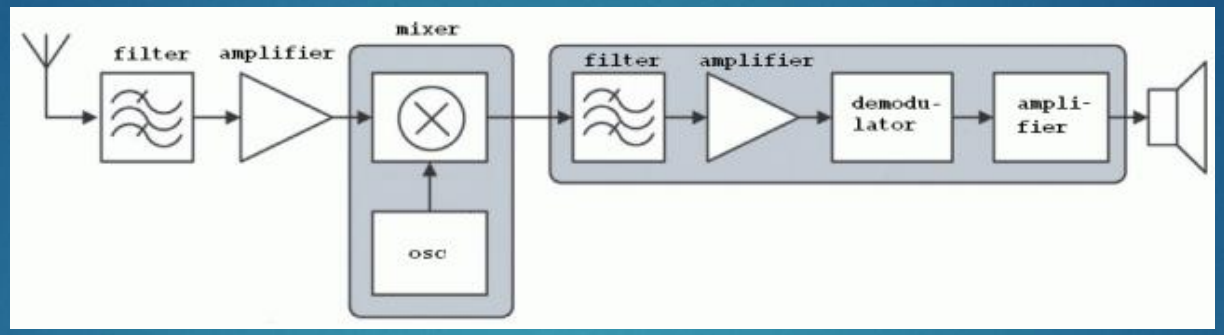

Typical Analog Receiver

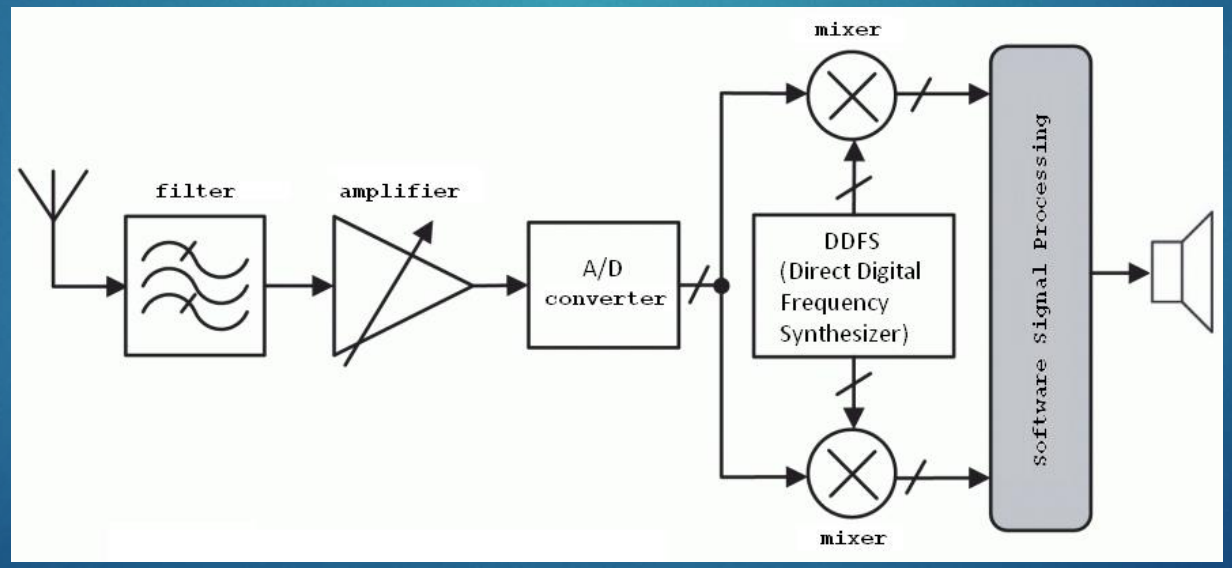

Basic digital SDR receiver

SDR Advantages

- Smaller
- Uses modern parts / technology
- Cheaper (In Some Cases)
- Open Platforms
- Computer Is Sharing The Workload
- Custom Filtering
- Easy Tuning
- Visual look at a signal
- Point and Click

SDR Disadvantages

- Dependent on Computer (Not Always)
- Difficult to run on older computers
- Software Limitations
- Filtering Traded For Space
- Transmitting is more costly

Receivers

- Many different SDR receivers out in the market
- Can be used standalone or as a Panadapter
- Some units depend on a sound card
- Prices vary from $15 to Thousands!
- Various Software options

RTL-SDR

- Cheapest and best option for an entry level SDR unit
- Developed as a **D**igital **V**ideo **B**roadcast – **T**errestrial (DVB-T) and **D**igital **A**udio **B**roadcasting – **FM** (DAB-FM) receiver
- Uses the Realtek RTL2832U demodulator
- While messing around with a DVB-T dongle someone found that the tuner can handle way more than just the FM and TV bands
- Can tune from approx. 60Mhz to 1.7Ghz*
- View up to a 2.5Mhz slice of spectrum
- Became extremely popular in 2012
- Can be used with many different software
- **You get what you pay for!**

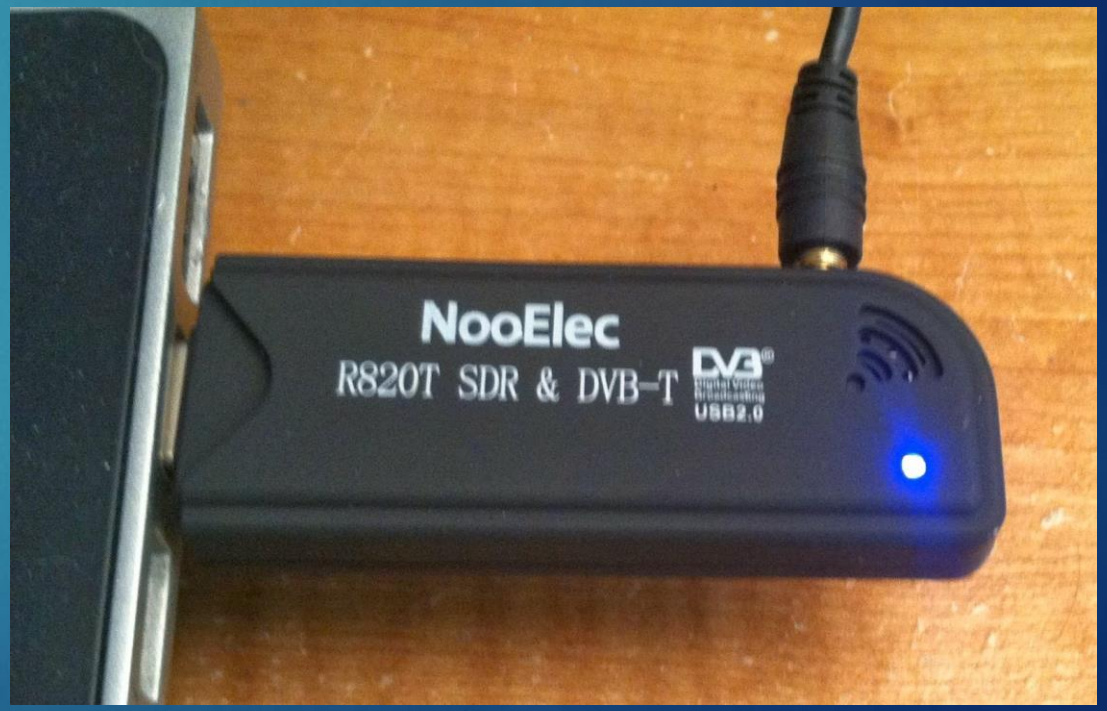

SDR#

- Most popular software to use the RTL-SDR
- Developed by Youssef Touil as an open source program
- Written for windows using C# in 2012
- Gained popularity due to its "Plug And Play" ease of use
- Licensing issues caused some problems. No longer "Open" and more difficult to use the RTL but still possible.
- Many features added over time that utilizes the RTL such as
  - WFM for FM Radio Broadcasts w/ RDS decoding
  - Supports other SDR hardware such as Softrock, HackRF, Funcube, RF Space SDR
  - Scanning / Frequency Lists
  - Digital decoding of P25, NXDN, MOTOTRBO, X2-TDMA, C4FM and D-STAR possible
  - Audio Recording
  - Plugins available by other developers

Let me show you SDR#

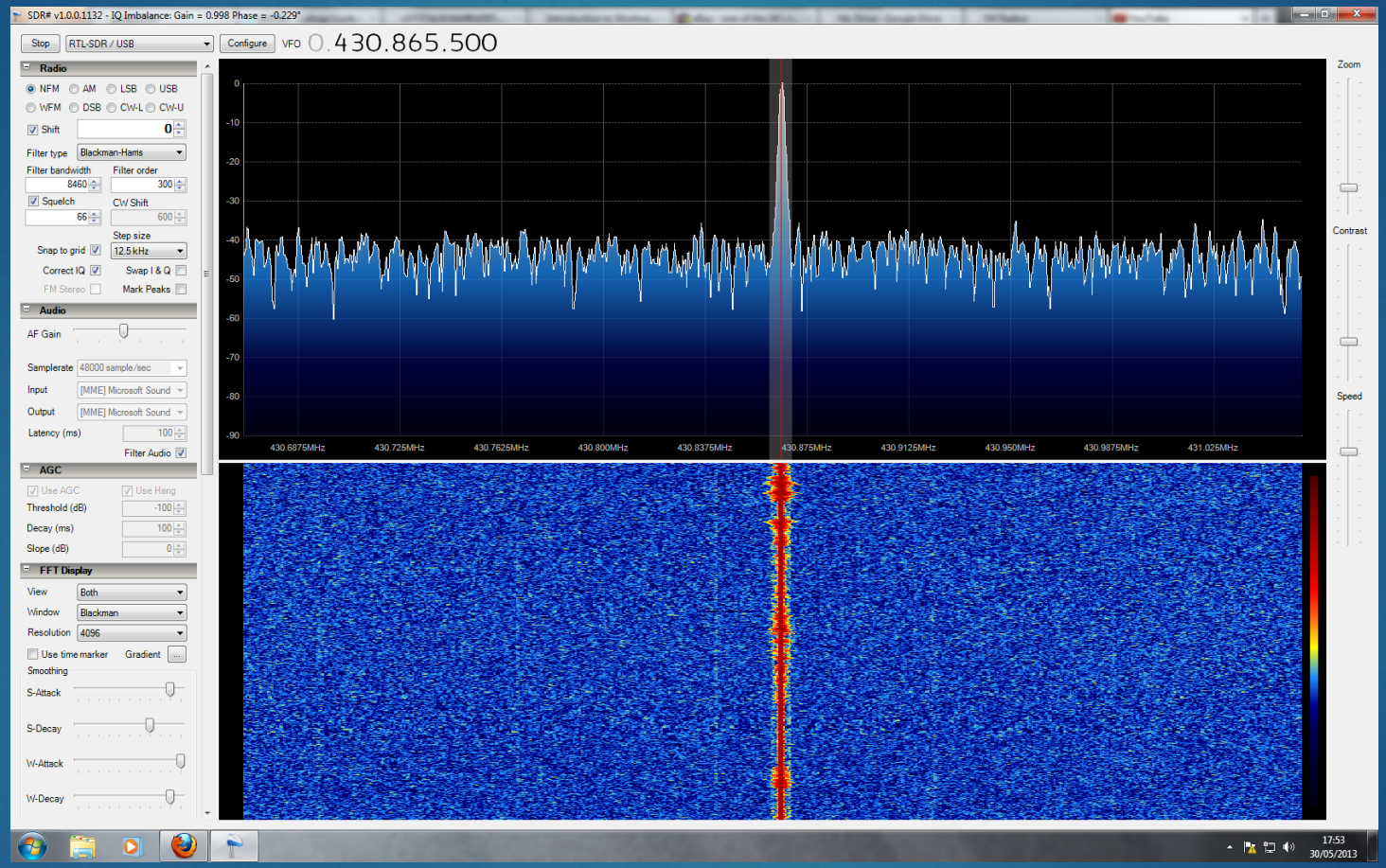

Hopefully It Works… We'll See!

Just some of the other SDR **Receivers** that are Popular In Amateur Radio

Model	Band	Price	Bandwidth	Notes
Softrock Lite II Kit	HF	21	48Khz-192kHz	Fixed Frequency
Softrock Ensemble II	HF	60/90	48khz-192kHz	Depends on sound card
FiFi SDR	HF	169	192kHz	Has Preselector for better filtering
Funcube Pro+	H/V/U	220	192kHz	100kHz-240Mhz and 420MHz-1.9Ghz
AFEDRI SDR-Net	HF	250	1.8MHz	IP or USB (200KHz) / lacks filtering
Bonito Radio Jet	HF	750	48kHz	Very High IP3 (+29dBm)
WiNRADIO Excalibur	HF	850+	50Mhz	Can Double as Spectrum Analyzer
PERSEUS	HF	1145	40Mhz	
RF Space NetSDR	HF	1449+	2.0Mhz	16bit ADC

Software

- Numerous SDR software available
- Software developed for hardware specific, proprietary, open source, closed source and for different platforms
- Pick the correct software that matches your needs
- Some Popular Software Titles are
  - SDR#
  - SDR-Radio
  - Modified Versions of PowerSDR (NaP3 for example)
  - HDSDR
  - SpectraVue (RF Space)
  - Rocky (Great for Softrock)

SDR -Radio

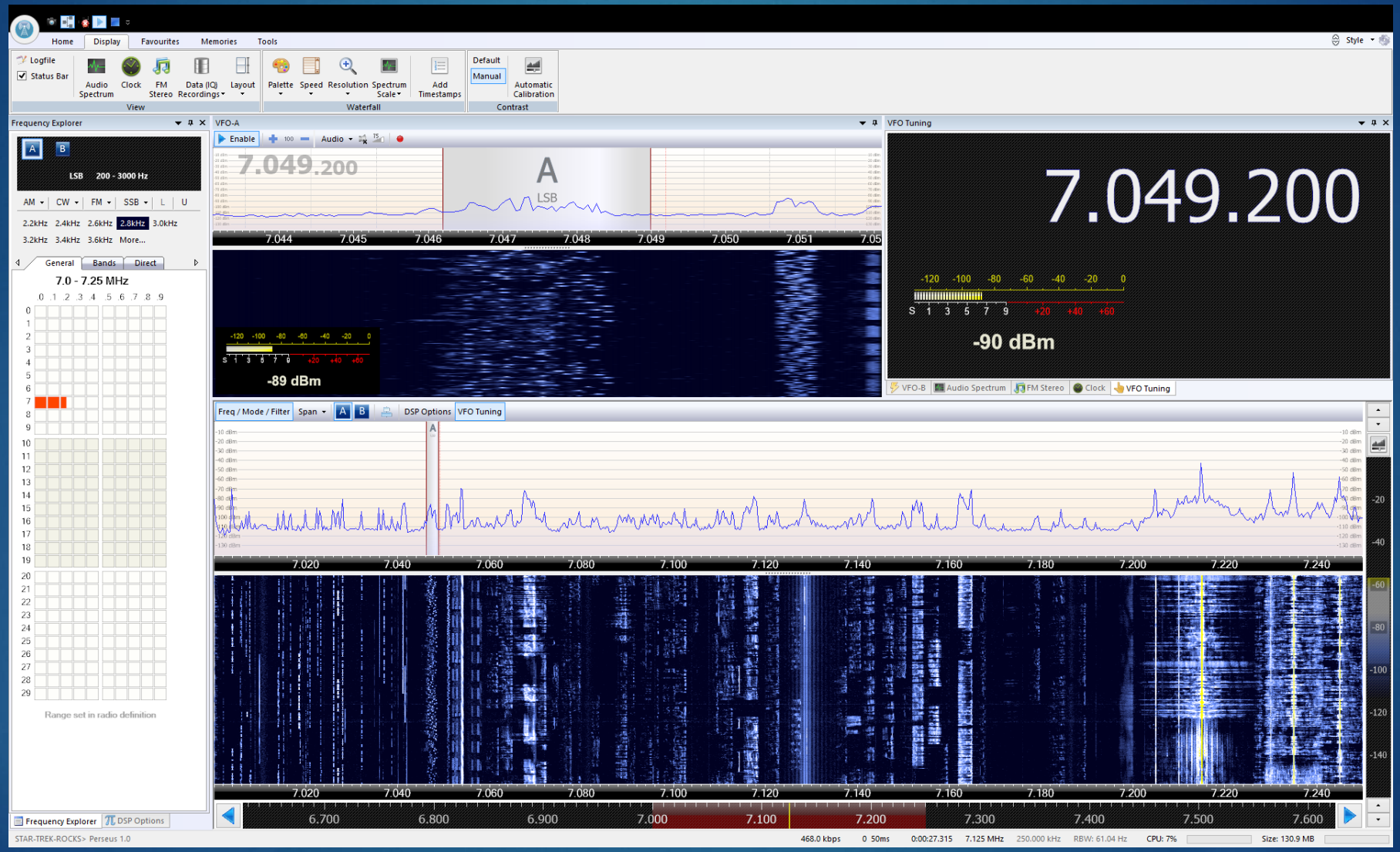
Home
Display
Favourites
Memories
Tools
Style
Logfile
Status Bar
Audio Spectrum
Clock
FM Stereo
Data (IQ) Recordings
Layout
View
Palette
Speed
Resolution
Spectrum Scale
Add Timestamps
Waterfall
Default
Manual
Automatic Calibration
Contrast
Frequency Explorer
LSB 200 - 3000 Hz
AM
CW
FM
SSB
2.2kHz 2.4kHz 2.6kHz 2.8kHz 3.0kHz
3.2kHz 3.4kHz 3.6kHz More...
General
Bands
Direct
7.0 - 7.25 MHz
Range set in radio definition
Frequency Explorer
DSP Options
VFO-A
Enable
Audio
7.049.200
A
LSB
-89 dBm
VFO Tuning
7.049.200
-90 dBm
VFO-B
Audio Spectrum
FM Stereo
Clock
VFO Tuning
Freq / Mode / Filter
Span
DSP Options
VFO Tuning
6.700 6.800 6.900 7.000 7.100 7.200 7.300 7.400 7.500 7.600
STAR-TREK-ROCKS> Perseus 1.0
468.0 kbps
0:00:27.315
7.125 MHz
250.000 kHz
RBW: 61.04 Hz
CPU: 7%
Size: 130.9 MB

PowerSDR

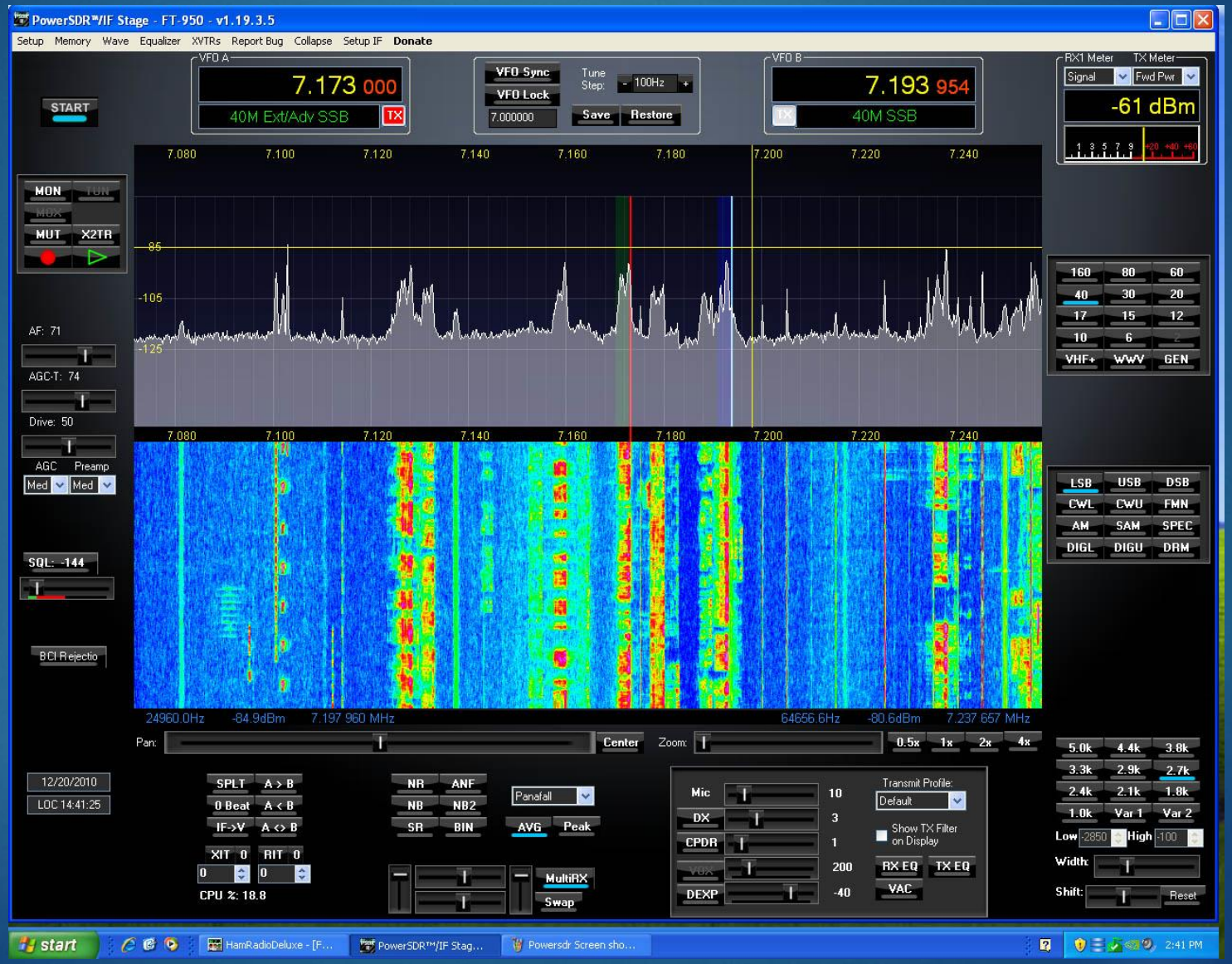
PowerSDR™/IF Stage - FT-950 - v1.19.3.5
Setup Memory Wave Equalizer XVTRs Report Bug Collapse Setup IF Donate
VFO A
7.173 000
40M Ext/Adv SSB
VFO Sync
VFO Lock
Tune Step:
100Hz
Save
Restore
VFO B
7.193 954
40M SSB
RX1 Meter
TX Meter
Signal
Fwd Pwr
-61 dBm
START
MON
MUT
X2TR
AF: 71
AGC-T: 74
Drive: 50
AGC
Preamp
Med
SQL: -144
BCI Rejectio
12/20/2010
LOC 14:41:25
SPLT
A > B
0 Beat
A < B
IF->V
A <> B
XIT 0
RIT 0
CPU %: 18.8
NR
ANF
NB
NB2
SR
BIN
Panafall
AVG
Peak
MultiRX
Swap
Mic
DX
CPDR
VOX
DEXP
Transmit Profile:
Default
Show TX Filter on Display
RX EQ
TX EQ
VAC
Pan:
Center
Zoom:
0.5x
1x
2x
4x
Low
High
Width:
Shift:
Reset
start
HamRadioDeluxe - [F...
PowerSDR™/IF Stag...
Powersdr Screen sho...
2:41 PM

HDSDR

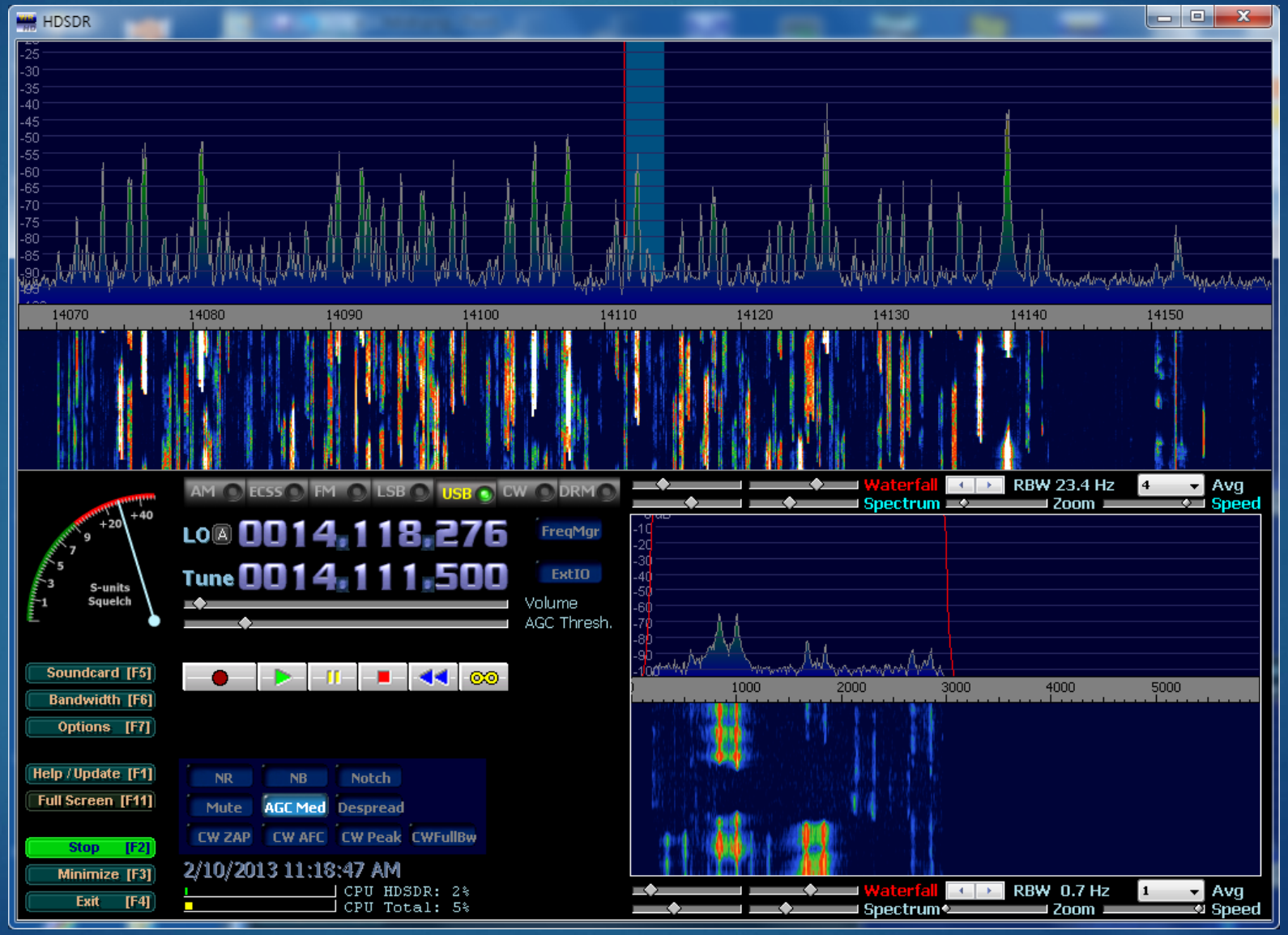
HDSDR
14070
14080
14090
14100
14110
14120
14130
14140
14150
AM
ECSS
FM
LSB
USB
CW
DRM
LO
0014.118.276
Tune
0014.111.500
FreqMgr
ExtIO
Volume
AGC Thresh.
S-units
Squelch
Soundcard [F5]
Bandwidth [F6]
Options [F7]
Help / Update [F1]
Full Screen [F11]
Stop [F2]
Minimize [F3]
Exit [F4]
NR
NB
Notch
Mute
AGC Med
Despread
CW ZAP
CW AFC
CW Peak
CWFullBw
2/10/2013 11:18:47 AM
CPU HDSDR: 2%
CPU Total: 5%
Waterfall
Spectrum
RBW 23.4 Hz
Zoom
Avg
Speed
1000
2000
3000
4000
5000
RBW 0.7 Hz

SpectraVue (RF Space)

Offset 0

1 FFT Ave

0 Smoothing

65536 FFT/BLK

Fs=1333213 RBW= 20 Hz

3 dB/Div V Scale

4.3478085 MHz -59.453 dB

4.391 200 MHz

Span

1.200 000 MHz

☑ Demod On

○ AM ○ WFM
○ FM ○ NFM
○ LSB ○ USB
○ SAM ○ WUSB
○ CW-L ● CW-U

Filter -250 500 250

SDR-IP->Sound1

1 Jan 2013 14:52:54 UTC

AM BCB Overload.
- WSPR
- WACM?

EWWWWWWWWWWWWWWWWWWWWWWWW

SpectraVue – Much Better!

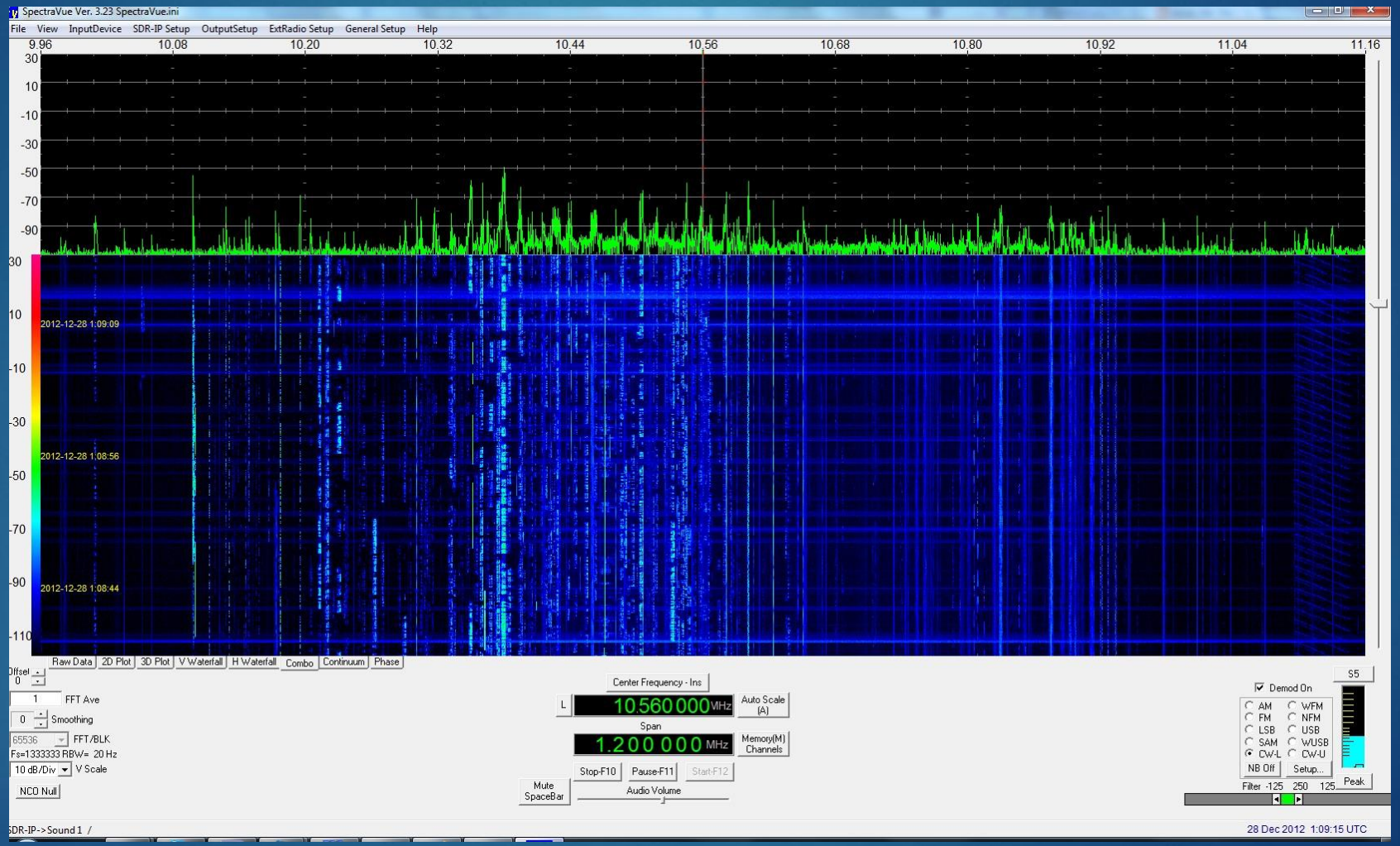

AM BCB Gone Using FT-950 Converted IF out

Rocky

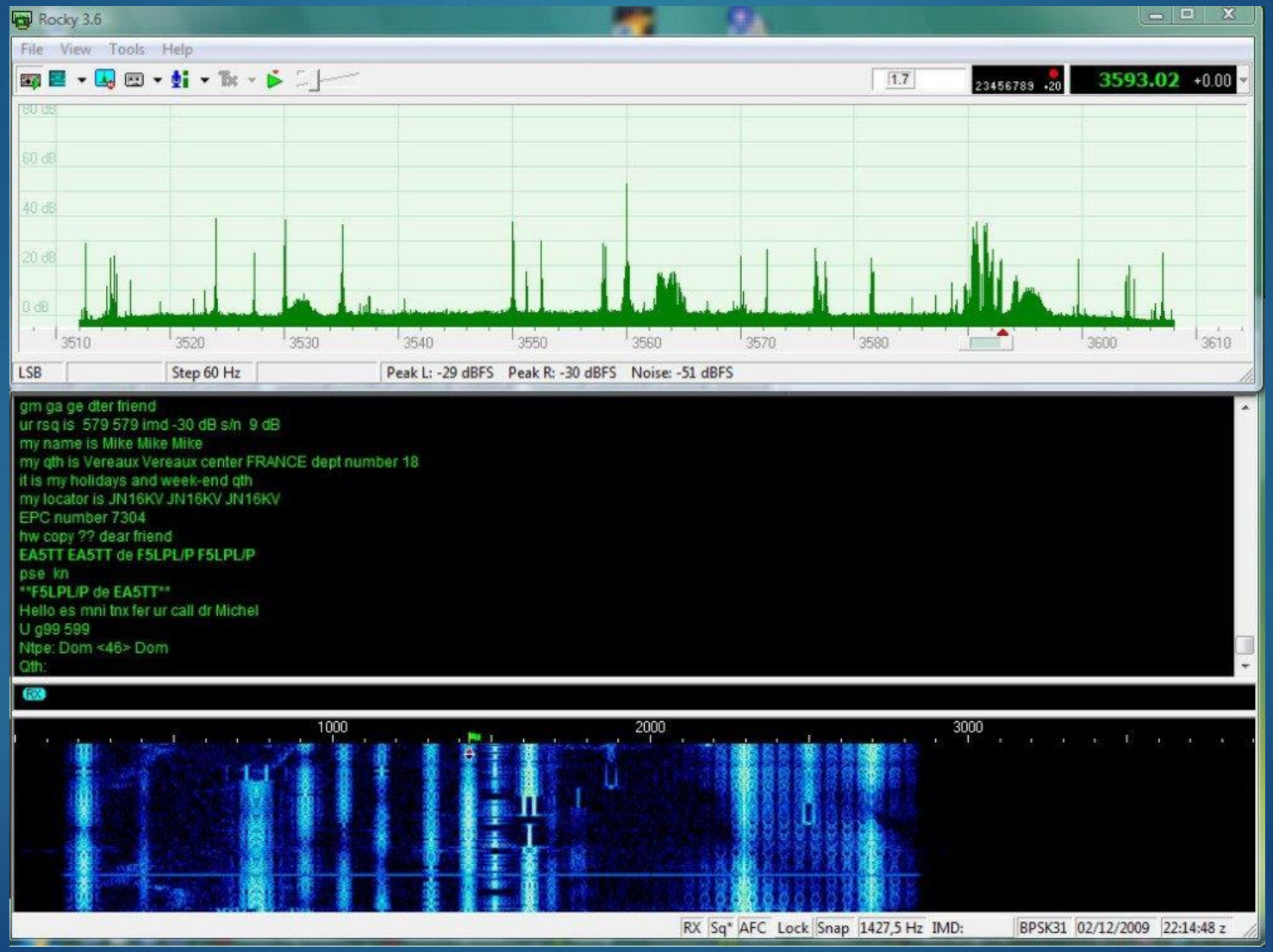
Rocky 3.6
File View Tools Help
1.7
23456789 +20
3593.02 +0.00
80 dB
60 dB
40 dB
20 dB
0 dB
3510 3520 3530 3540 3550 3560 3570 3580 3600 3610
LSB
Step 60 Hz
Peak L: -29 dBFS Peak R: -30 dBFS Noise: -51 dBFS
gm ga ge dter friend
ur rsq is 579 579 imd -30 dB s/n 9 dB
my name is Mike Mike Mike
my qth is Vereaux Vereaux center FRANCE dept number 18
it is my holidays and week-end qth
my locator is JN16KV JN16KV JN16KV
EPC number 7304
hw copy ?? dear friend
EA5TT EA5TT de F5LPL/P F5LPL/P
pse kn
F5LPL/P de EA5TT
Hello es mni tnx fer ur call dr Michel
U g99 599
Ntpe: Dom <46> Dom
Qth:
RX
1000
2000
3000
RX Sq* AFC Lock Snap 1427,5 Hz IMD: BPSK31 02/12/2009 22:14:48 z

But What If I Want To Transmit?

- There are SDR radios that allow you to transmit.
- Generally more expensive than standalone receivers
- Fewer software choices that allow for TX
- Some of the popular SDR Transceivers are
  - Flex Series Radios (1500, 3000, 5000, 6300, 6700) / $700-$7500
  - Hermes (Apache Labs ANAN-100D/200D) / $1700-$4000
  - Peaberry – 1W $150
  - Softrock RX/TX – 1W $89 Kit

TX Alternative… Use your existing HF Rig

- Possible to add SDR Capabilities to your existing HF Radio
- Some radios have IF output already included
- Some rigs can be adapted or modified to provide an IF output freq
- If the SDR Hardware can receive the IF frequency then it's possible
- SDR Software available to control the rig while locking the SDR tuned to the IF frequency of your main rig putting out
- Depending on the hardware, it's also possible to view the TX signal like a station monitor.
- Latency is a concern.

My Personal Setup

- FT-950 has no IF Out
- Possible to Tap the IF
- Went with RF-Space card to convert IF down
- Combined with the AFEDRI, I'm able to "See" 1.25MHz of bandwidth
- With SepectraVue and/or SDR-Radio, I'm able to control the rig using the software

“Block” Diagram of my Station

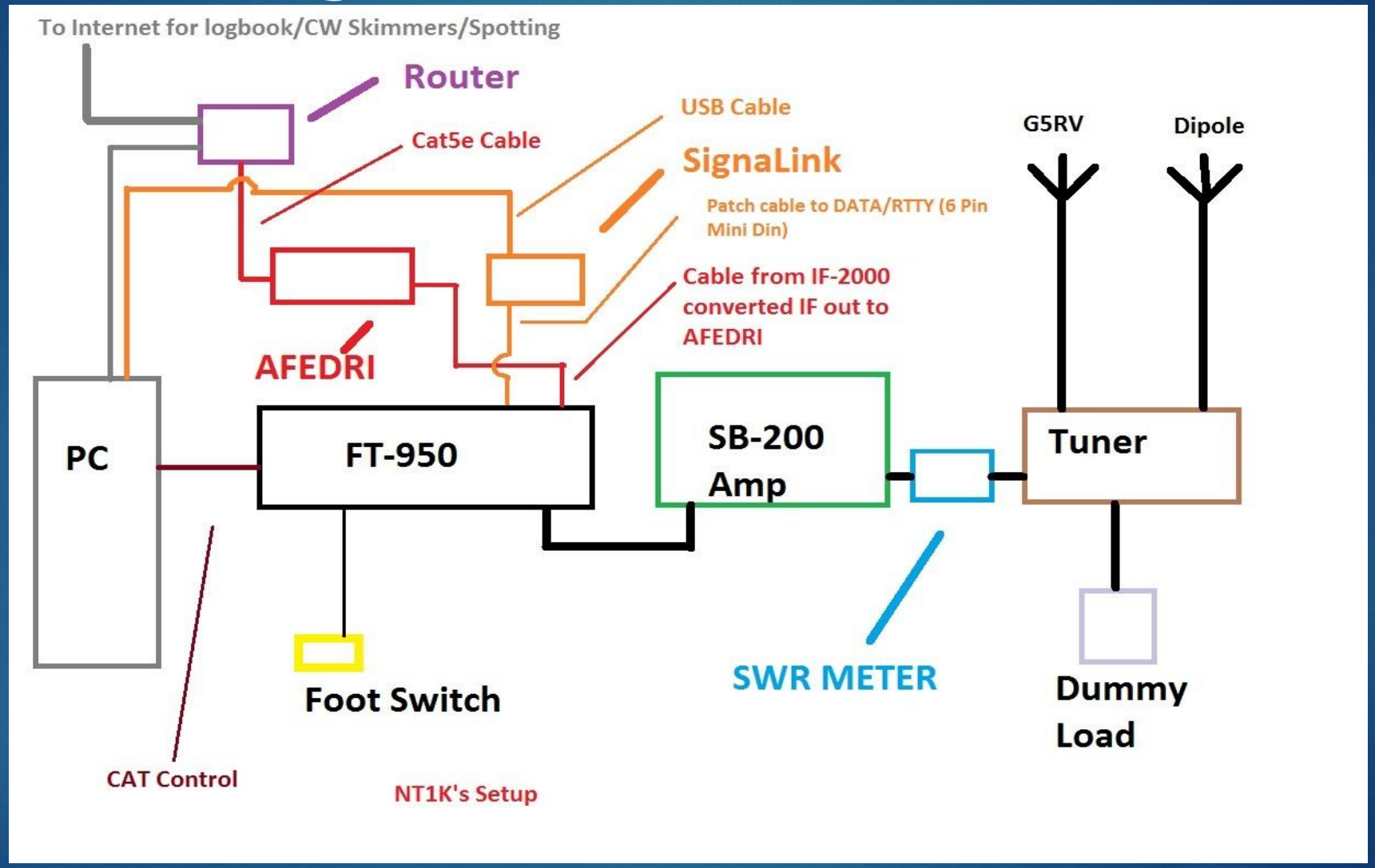

YAY MS PAINT!

Contesting With A Panadapter

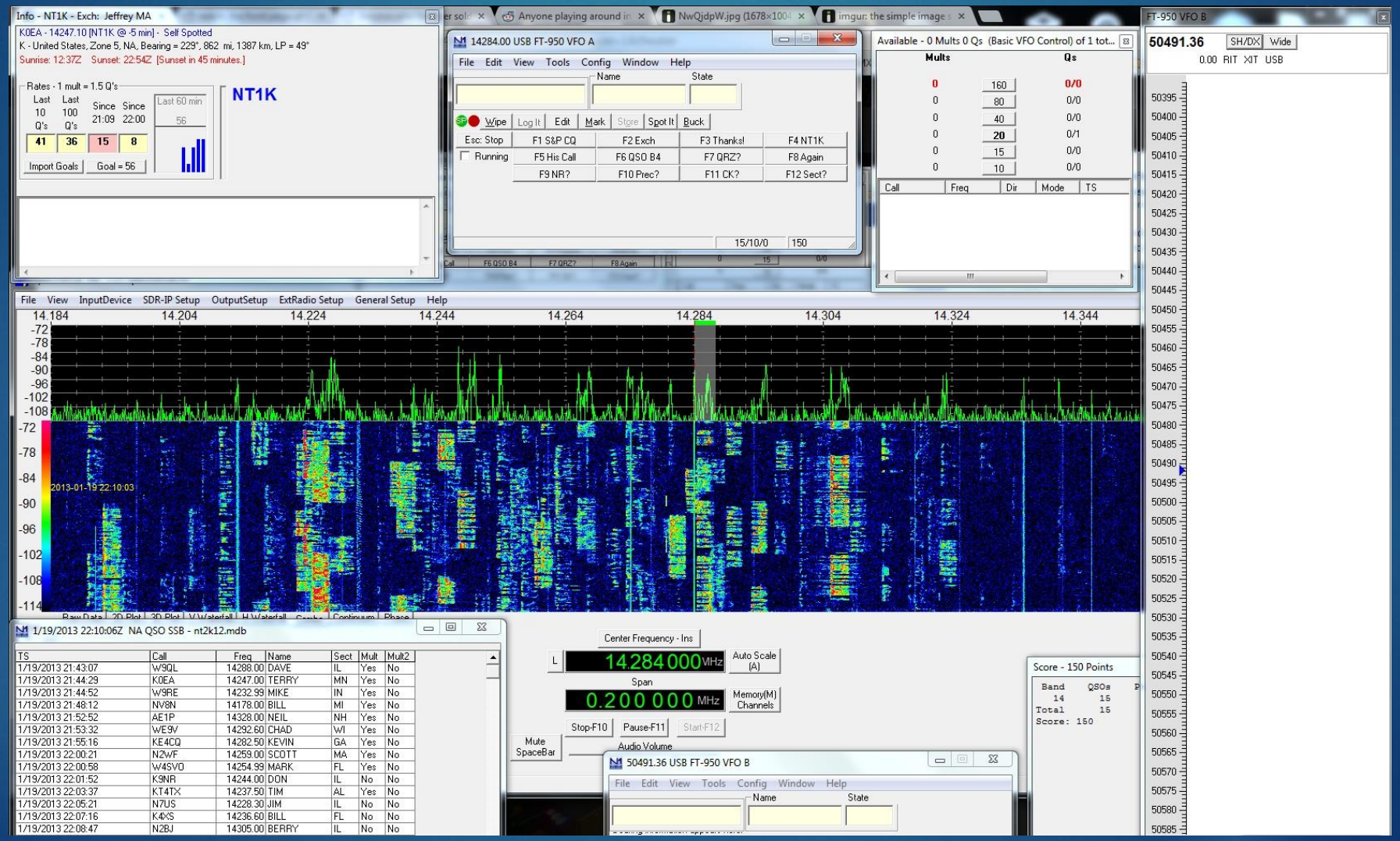

Contesting With A Panadapter

- Allow to easily see if a Band is “Alive” just with a quick glance
- Click and tune
- It’s possible to decode the entire CW portion of a band at one time using software like CW Skimmer.
- Don’t need to use the cluster/skimmer
- Software is a bit laggy depending on setup.
- Faster QSO Rates for S&P


That's all Folks!